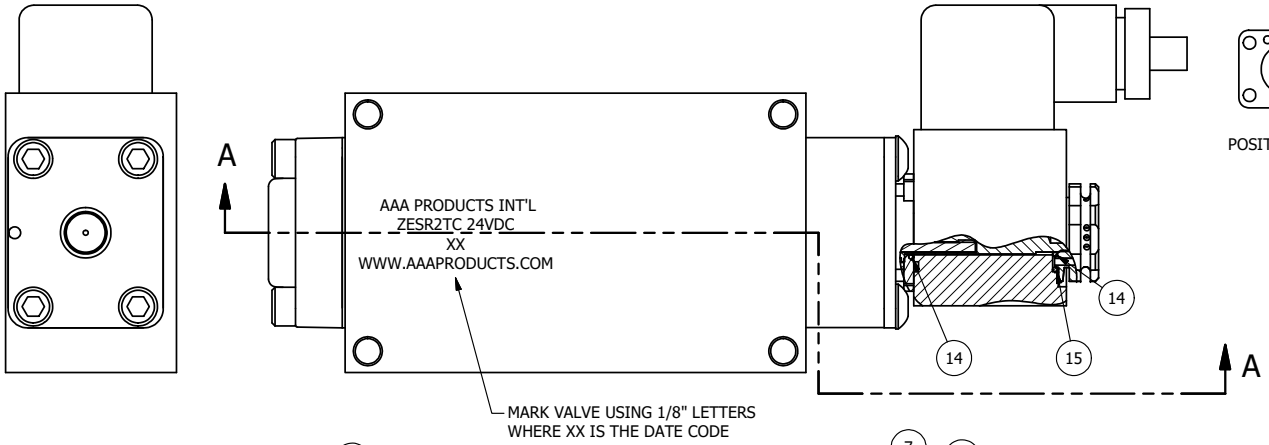

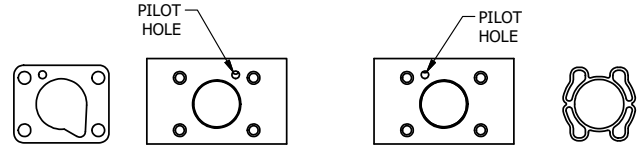

POSITION GASKET TO SEAL PILOT HOLE
SIDE 'B' ONLY.

ALIGN PILOT AND SLOT IN ADAPTOR
WITH GASKET IN BETWEEN SIDE 'A' ONLY
FOR EXTERNAL PILOT OPERATION - ROTATE ADAPTOR
180 DEGREES. REMOVE 1/8" NPTF PLUG AND
SUPPLY 50-150 PSI TO 1/8" NPTF PILOT PORT IN ADAPTOR.

NOTES:
1) ALWAYS GIVE VALVE MODEL AND PART NUMBER WHEN ORDERING PARTS.
2) FOR DIFFERENT VOLTAGES OTHER THAN 24VDC, CONSULT FACTORY.

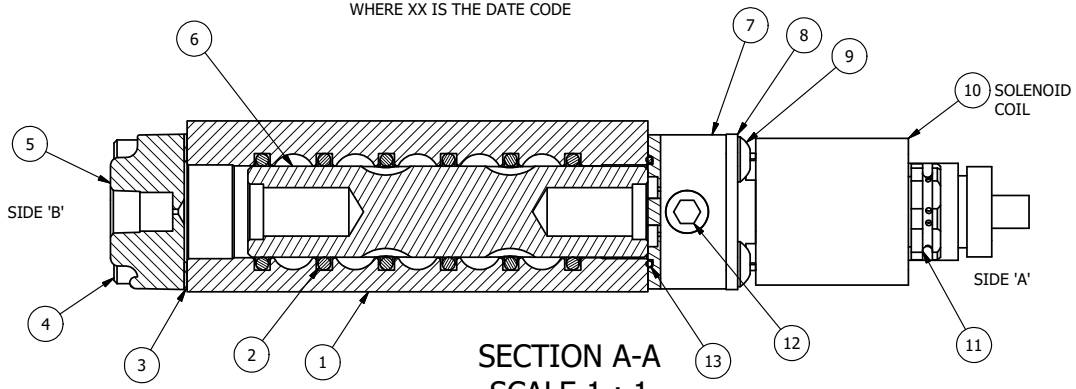

SECTION A-A
SCALE 1 : 1
VIEW FROM 3 PORT SIDE

FLG	QTY	PART NO	DESCRIPTION
15	1	V-607	O-RING, VITON, 75 DURO, 14MM X 1MM, IP67 NUT SEAL
14	2	V-606	O-RING, VITON, 75 DURO, 8MM X 1MM, IP67 STEM SEAL
13	1	EMG3	GASKET - END MOUNT SOLENOID, BUNA-N, 1/4" & 3/8" VALVES
12	1	V-19-SS	PLUG, SOCKET PIPE 1/8"-27 NPT, 7/8 TAPER, PLAIN, FLUSH SEAL, STAINLESS STEEL
11	1	V-562	NUT, SOLENOID, SIDE EXHAUST
10	1	V-612-3	ATEX COIL 24 VDC WITH 3 METER CORD. NASS # 1215 30.1-001/6896.
9	4	V-584-SS	SCREW, 10-24 X 1, BUTTON HEAD SOCKET CAP, 18-8 OR 303 SS
8	1	SEC3-7	PLATE, RE-INFORCEMENT, SOLENOID, STAMPED, 304 STAINLESS
7	1	V-550-1	SOL OPER, END MOUNT, NON-LOCKING O'RIDE
6	1	S3R	SPOOL - SOLID, STANDARD, 2 POS, CLSD CTR, 1/4" & 3/8" VALVE
5	1	PEC3-11	END CAP, PILOT, STAINLESS STEEL, 1/4" & 3/8" VALVE
4	4	V-38-SS	SCREW, 10-24 X 3/4, SOCKET HEAD CAP, 18-8 SS
3	1	ECG3	GASKET - END CAP, 1/4" & 3/8" VALVE
2	6	V-39	O-RING, VITON, STD BODY, 1/4" & 3/8" VALVES
1	1	ZB2-1	BODY - BRASS, UPPER PILOTS (BUTTON BLEEDER), 1/4" SIDE PORT VALVE

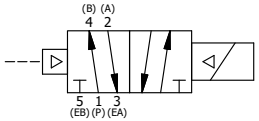

LIMITS ON DIMENSIONS UNLESS OTHERWISE SPECIFIED
2-PL DECIMAL ± .01
3-PL DECIMAL ± .005
FRACTIONAL ± 1/64
ANGULAR ± 1/2'

AAA PRODUCTS INTERNATIONAL
7114 Harry Hines Blvd
Dallas, TX 75235

DRAWN: RMcKenna	DATE: 3/22/2016	CHECKED: KWaite	DATE: 3/22/2016
SCALE: 1 : 1	SHEET: 1 OF 1	RELEASED: HWomack	DATE: 3/22/2016

TITLE:
1/4" SIDE PORT, SNGL SOL, 2 POS,
FRICTION POS, PILOT RTRN,
BRASS & SS, ATEX, 24VDC, SIDE VENT

PART NO.: ZESR2TC 24VDC

REV.:

THE INFORMATION CONTAINED WITHIN THIS DOCUMENT IS PROPRIETARY TO AAA PRODUCTS AND MAY NOT BE DISCLOSED WITHOUT PRIOR WRITTEN CONSENT

D:\Engineering\Product\Valves\Assembly\Standard\ESR\DWG\ZESR2TC 24VDC.dw